Gx150i

Clean. Clear. Coding.

The **Gx1**50i Thermal Ink Jet (TIJ) printer is designed for product and packaging coding across many industries like food and beverage, industrial, and healthcare. The small print heads easily fit on production lines and can be mounted up to 25m from the controller. A 7" touchscreen with intuitive user interface enables easy and error-free operation and data input directly on board.

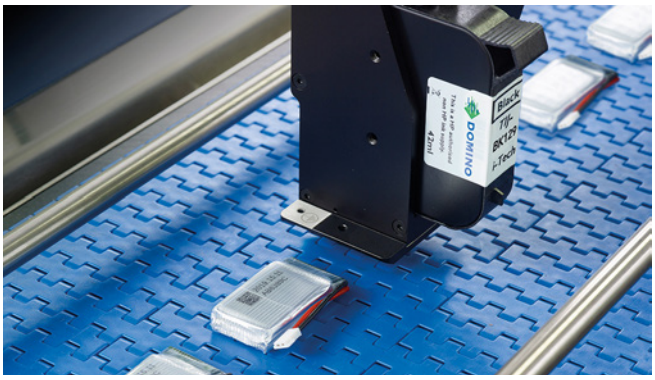

Easy to integrate

- Small footprint: easy print head integration and remote controller mounting.
- Print speeds up to 300m/min keep up with fast paced production.
- Dynamark communication protocol, 21 CFR Part 11 compliant with audit trail, comprehensive user administration, optional item level serialisation, and validation documentation.

Easy to operate

- Easy printer operation and monitoring using the touchscreen or via web browser.
- Automatic cartridge recognition and ink parameter setting.
- For uninterrupted production ***AutoSwap*** enables cartridge change while printing.
- Dual print head operation for 2 sides of line coding, 2 individual applications or increased message height.

Clean. Clear. Coding.

- Graphic printing quality on paper, card, plastic, metal, and many other materials.
- Flexible label design: text, counters, clocks, graphics, logos, barcodes can all be included on the same label.
- Grade A code readability (ISO 15415) using Domino's inks on high density datamatrix codes*.

Scan for more information

Domino. Do more.

Gx-Series print heads

- Fit easily with only 15.2 x 5.09 x 2.85cm space requirement and 3 connector options (front, back, top).
- LED status signals show the print status, e.g. which cartridge needs changing.
- Maintenance-free: exchange of the ink cartridge replaces all printer wear parts.
- Error-free coding with automatic ink parameter setting.

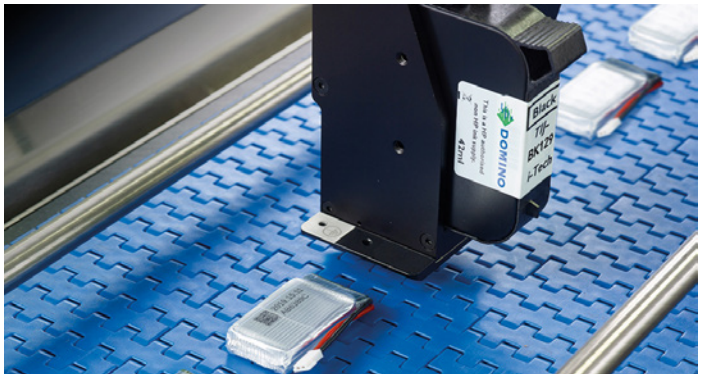

User interfaces

Domino offers a range of interfaces on the printer, on a PC and directly to our Cloud based dashboards

- Easy operation using the ***QuickStep*** interface on the touchscreen or via web browser on your HMI.
- Monitoring screens display live information about the printer; connection to Domino Cloud adds remote monitoring and diagnostics.
- Access levels can be defined to ensure safe handling.
- Label creation and editing are simple using the ***QuickStep*** Label Creator or our PC-based design software.
- Coding Automation solutions to populate data directly from a database and control changeovers from your ERP or MES system.

Technical specification

	Gx150i
Controller dimensions	Height: 75mm (2.95") / Width: 224mm (8.81") Depth: 156.5mm (6.16") / Weight: 1.55kg (3.4lbs)
Print head dimensions	Height: 152mm (5.98") / Width: 50.9mm (2") Depth: 28.5mm (1.12") / Weight: 0.22kg (0.48lbs)
Print head cables	3, 6, 12, or 25m
Print heads per controller	Up to 2 print heads for increased message height or individual printing on 2 different print positions
Print height	1 print head: 12.7mm 2 print heads: 25.4mm
Print speed and resolution	300m/min at 60dpi to 30m/min at 600dpi
External connection options	1 encoder, I/Os for beacons, product detects or other, 2 USBs (type A), RS232C, 2x LAN
Power connector	6mm DC power jack
Electrical supply	Input: 100-240 V AC, 50-60 Hz, 2 A Output: 24 V DC, 5 A
Controller operating temperature	0°-40°C (32°-104°F)
Operating relative humidity	20-80% RH (non condensing, 10°C increase per hour)
Controller finish	Stainless steel
Inks	A range of fast-drying water and solvent-based inks for porous and non-porous substrates, black, colours and specialist inks
i-Techx features	Automatic ink cartridge detection, automatic ink parameter setting, automatic ink level recording
Communication	Dynamark protocol
User interface	***QuickStep*** via 7" touch screen or customer HMI

* module size 40x40, ≤ 169 characters

Gx150i controller

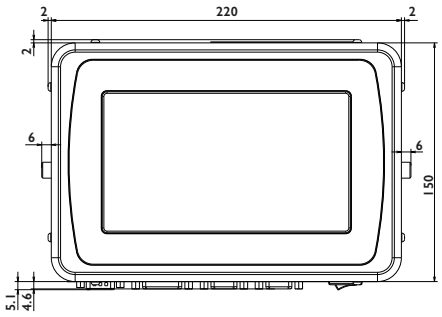

Printer bracket

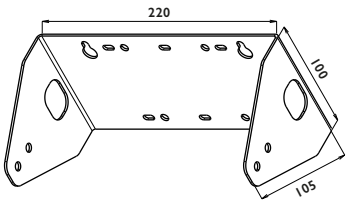

Gx-Series print head

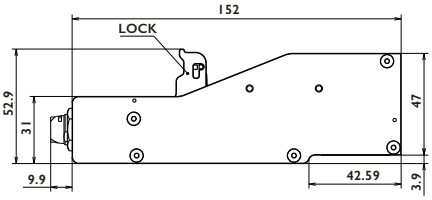

www.domino-printing.com

Gx150i_0420 EN All performance related figures and claims quoted in this document were obtained under specific conditions and may only be replicated under similar conditions. For specific product details, you should contact your Domino Sales Advisor. This document does not form part of any terms and conditions between you and Domino. Images may include optional extras or upgrades. Print quality may differ depending on consumables, printer, substrates and other factors. Images and photographs do not form any part of any terms and conditions between you and Domino.